PALLAZZO TIPO 1

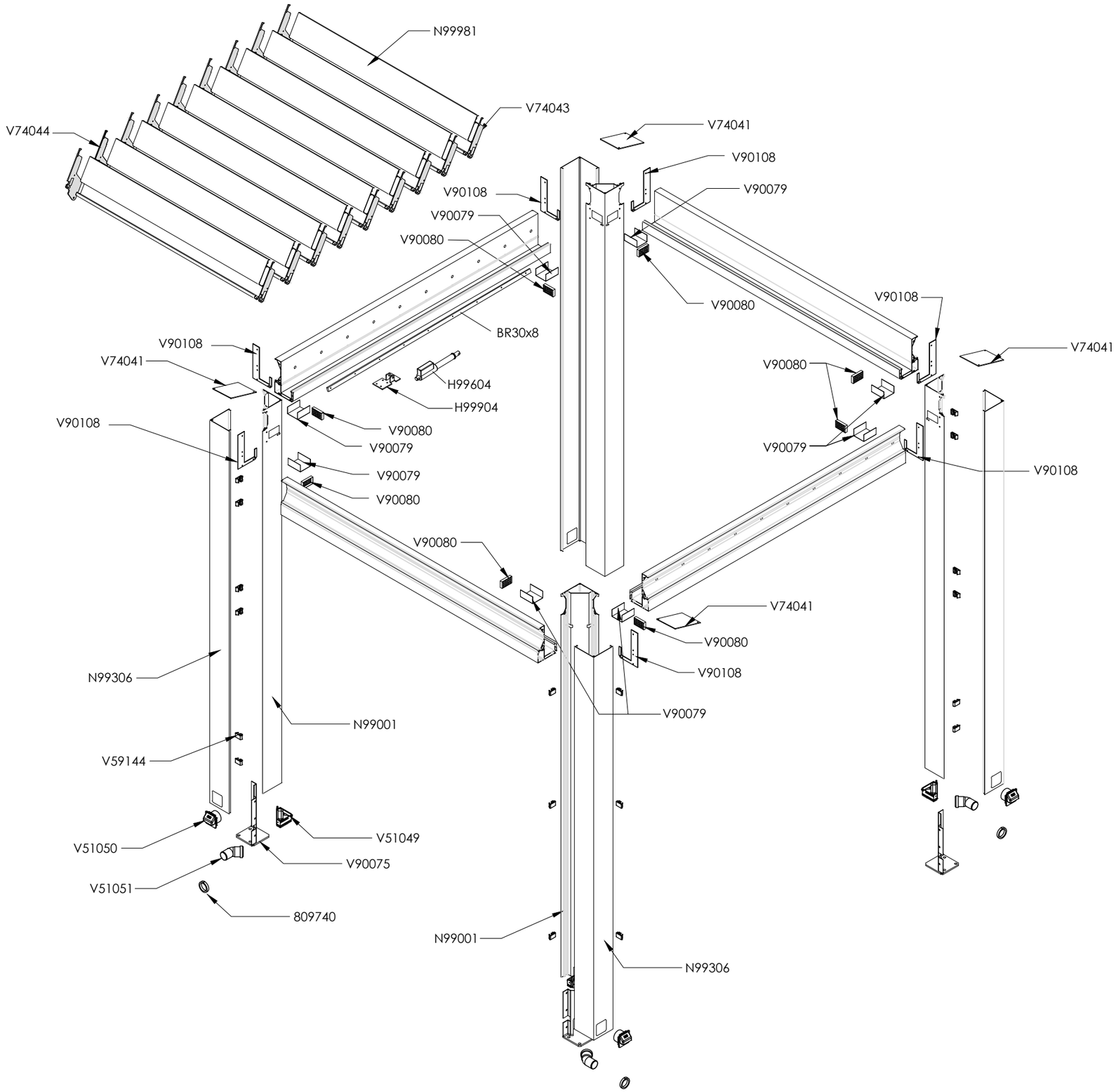

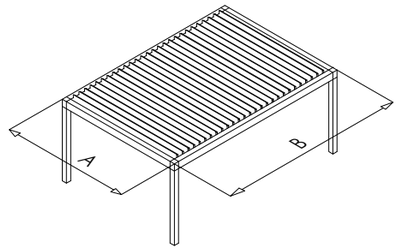

© 2022 AluK S.A. All rights reserved

PALLAZZO TIPO 2

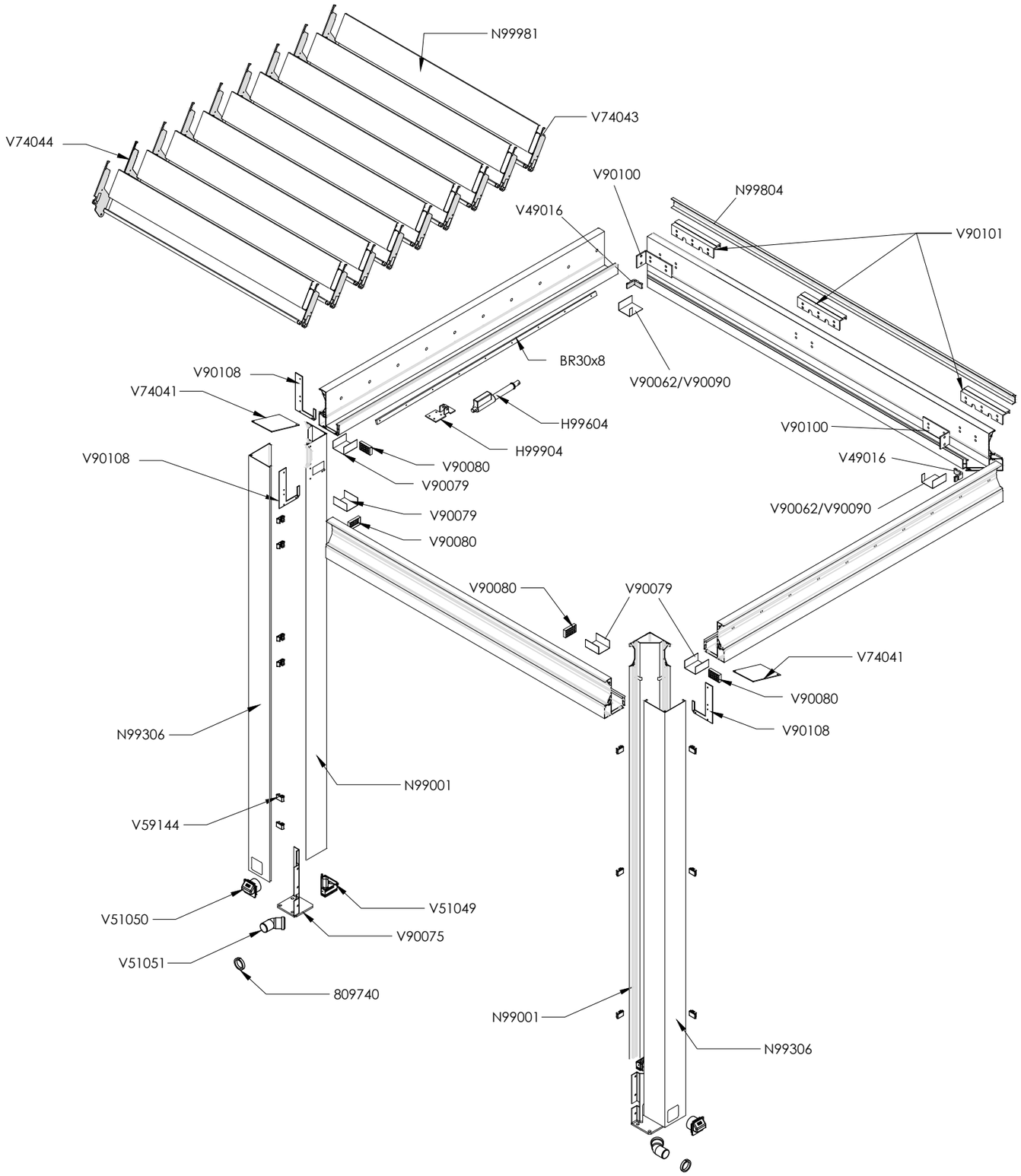

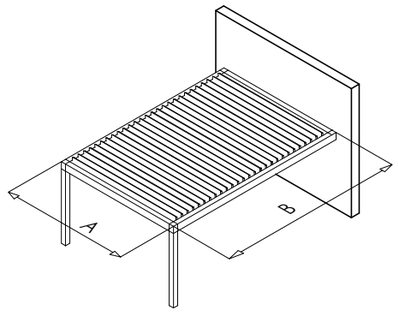

© 2022 AluK S.A. All rights reserved

PALLAZZO TIPO 3

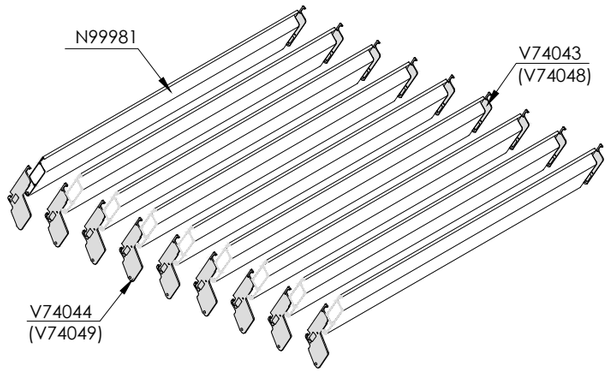

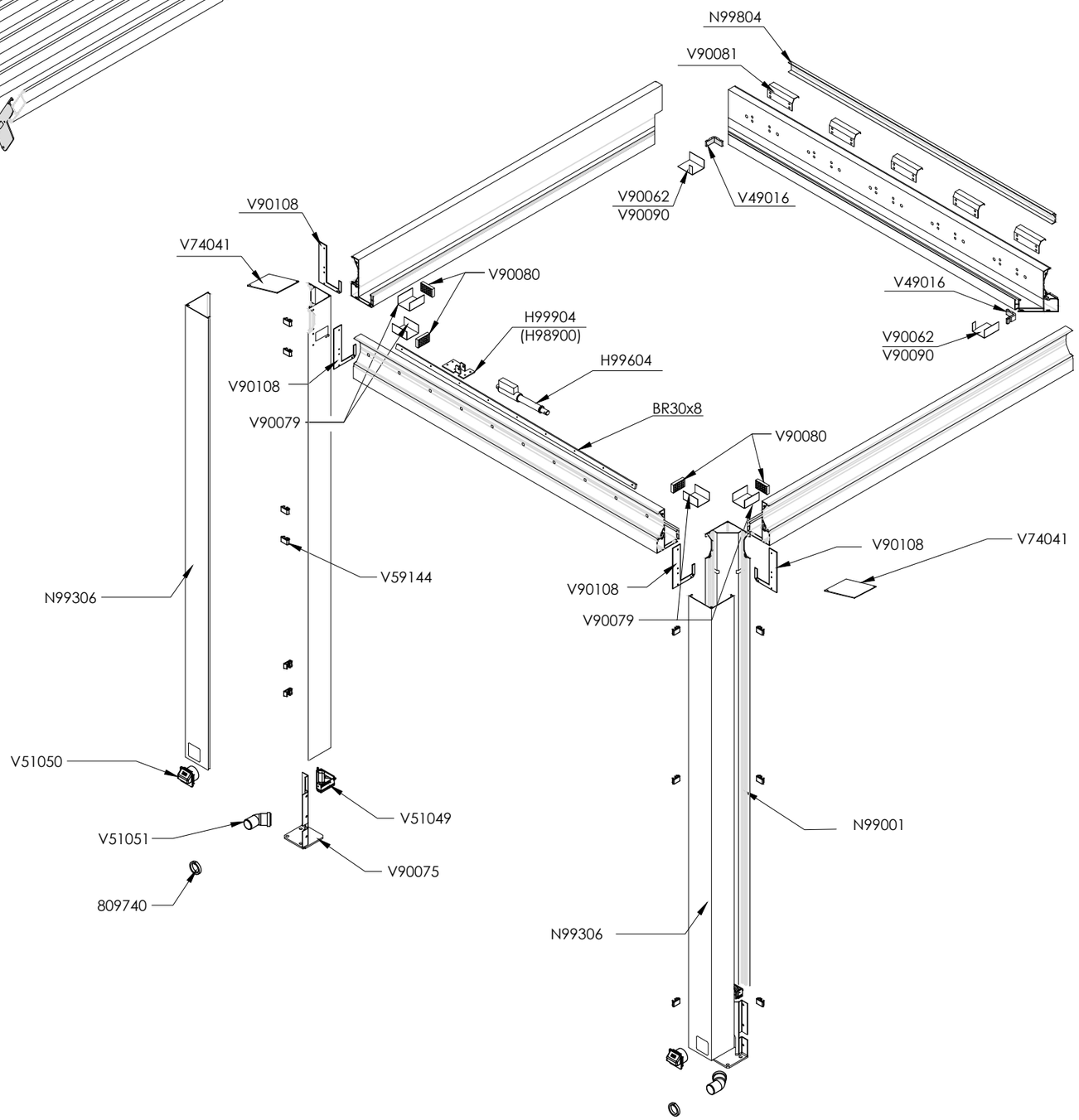

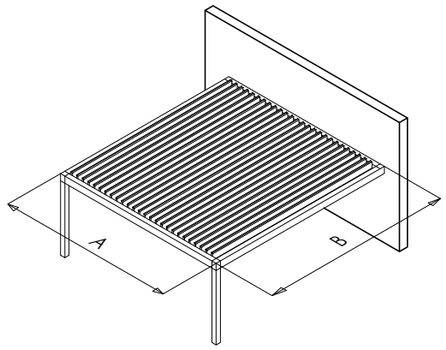

ASSEMBLAGGIO
Tipologia 3

© 2022 AluK S.A. All rights reserved

PALLAZZO TIPO 4

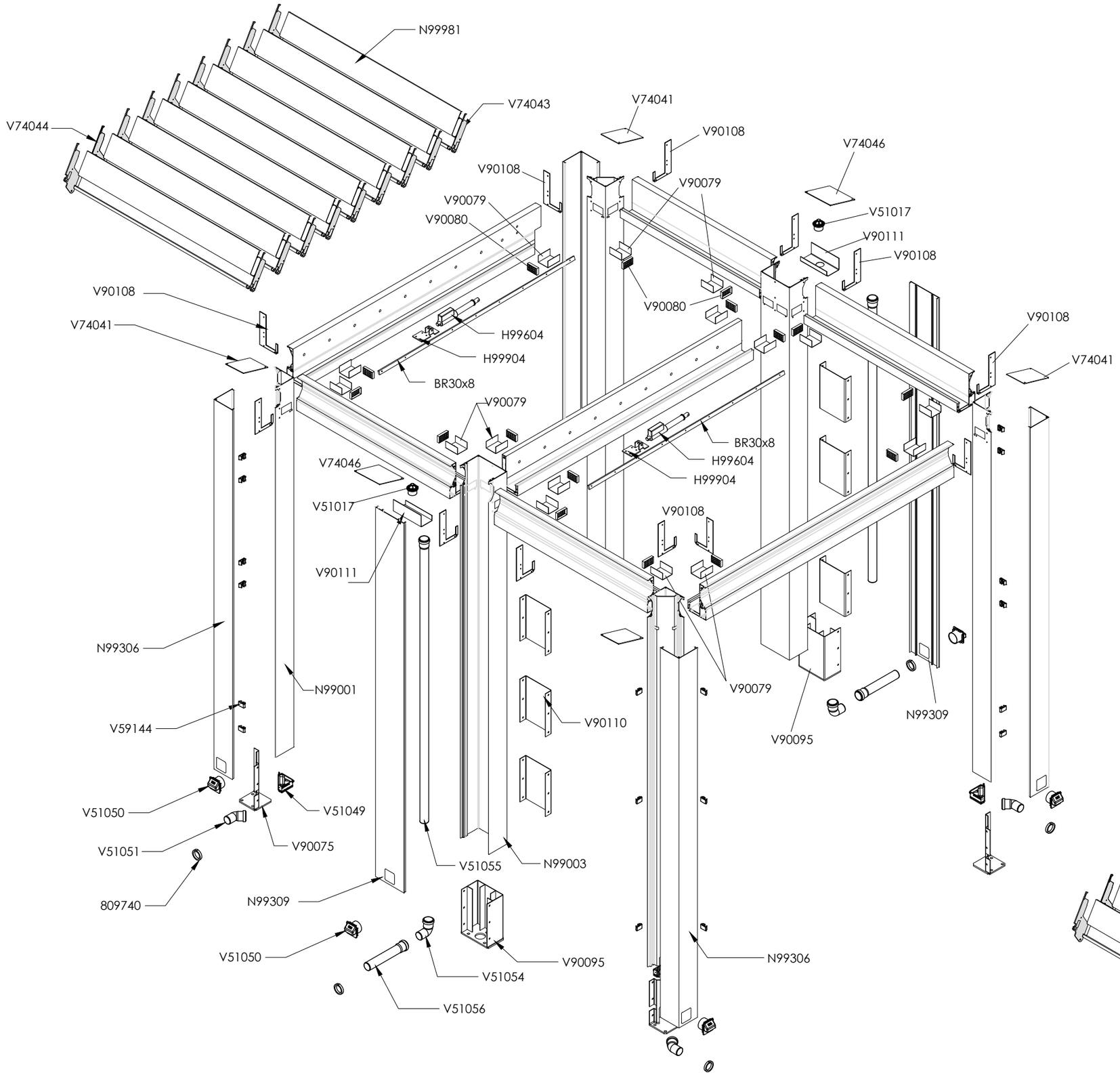

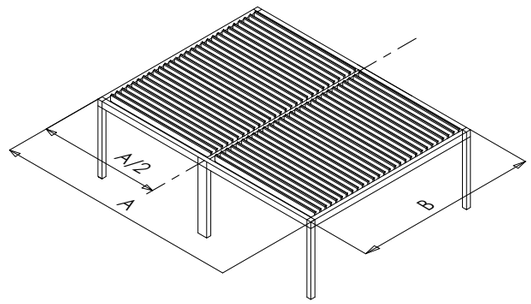

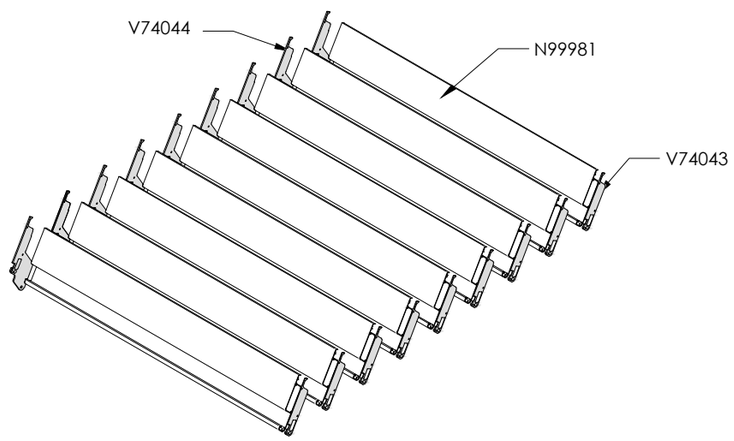

ASSEMBLAGGIO
Tipologia 4

© 2022 AluK S.A. All rights reserved